MTS

www.mtstooling.com

2017

Turret Punch

TOOLING CATALOGUE

>>

/ / Company Profile:

MTS is the industrial leader providing tooling solutions that deliver peak performance for sheet metal fabricators. With its wide product range of its tools, MTS the pioneer for the high technology punch press and press brake tooling in India provides the perfect solution for every application in sheet metal processing. The intelligent process technique turns superior quality raw materials into high performance tools which are highly robust, low wear and maintenance friendly. Constant new development and improvements turn MTS tooling into innovation driver.

The use of high-tech and state of art machine at MTS provides unbeaten production efficiency at customer end. With trained sales personnel all over India, we ensure your order is taken care of up to the utmost details. With blank tools in stoke we have the ability to deliver tools at a faster rate at a competitive price.

STUDER
S 32

Index

Tooling for Thick Turret	4-12
Tooling for Trumpf	14-19
Tooling for Muratec	20-22
Options	23
Forming Tools	24-32
Calculations & Shapes	33-34

Tooling for Thick Turret

A STATION - MAX Ø 12.7 mm

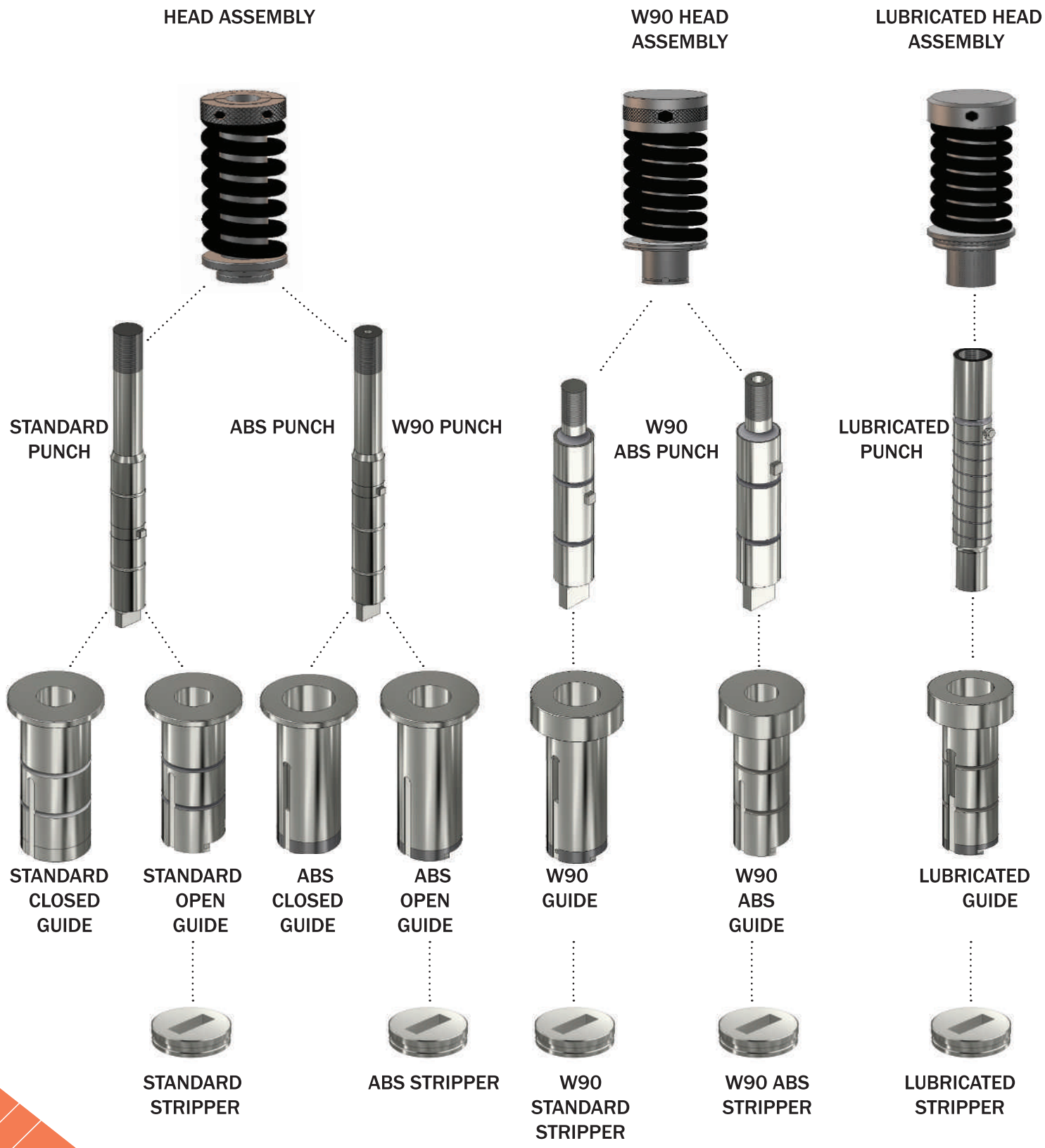

B STATION - MAX Ø 31.7 mm

C STATION MAX Ø 50.8mm

STANDARD GUIDE ASSEMBLY

BUTTON GUIDE ASSEMBLY

ABS GUIDE ASSEMBLY

WILSON GUIDE ASSEMBLY

STANDARD PUNCH

STANDARD PUNCH

ABS PUNCH

W90 PUNCH

STANDARD STRIPPER

STANDARD STRIPPER

ABS STRIPPER

W90 STRIPPER

W90 ABS STRIPPER

D STATION MAX Ø 88.9mm

STANDARD GUIDE ASSEMBLY

STANDARD PUNCH

STANDARD STRIPPER

BUTTON GUIDE ASSEMBLY

STANDARD PUNCH

STANDARD STRIPPER

ABS GUIDE ASSEMBLY

ABS PUNCH

ABS STRIPPER

WILSON GUIDE ASSEMBLY

W90 PUNCH

W90 STRIPPER

W90 ABS STRIPPER

E STATION MAX Ø 114.3mm

STANDARD GUIDE ASSEMBLY

BUTTON GUIDE ASSEMBLY

ABS GUIDE ASSEMBLY

WILSON GUIDE ASSEMBLY

STANDARD PUNCH

STANDARD PUNCH

ABS PUNCH

W90 PUNCH

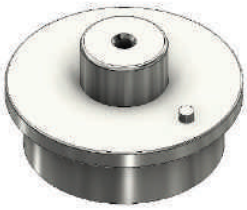

STANDARD STRIPPER

STANDARD STRIPPER

ABS STRIPPER

W90 STRIPPER

W90 ABS STRIPPER

PARTING TOOLS

C STATION

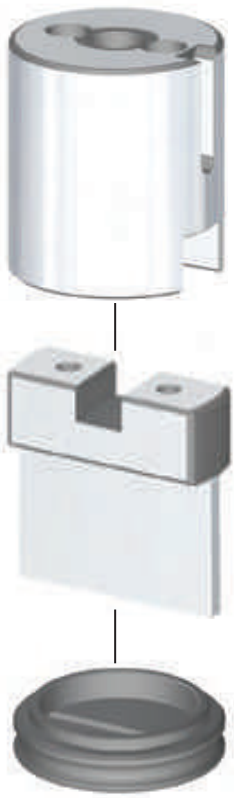

D STATION

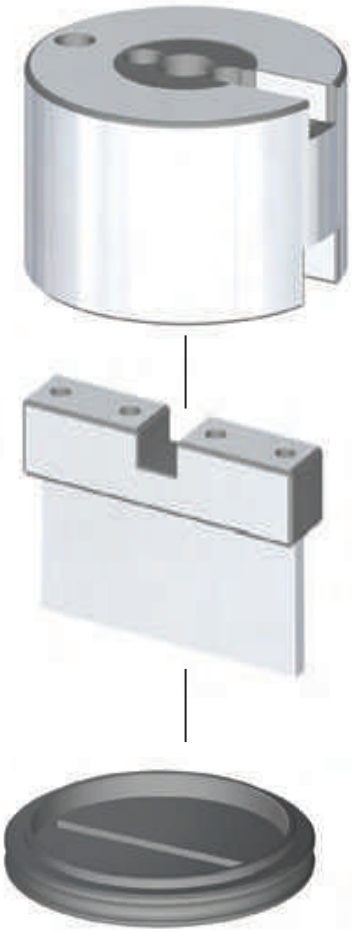

E STATION

MULTITOOLS

MULTITOOLS FOR EUROMAC

XMTE-10

XMTE-6

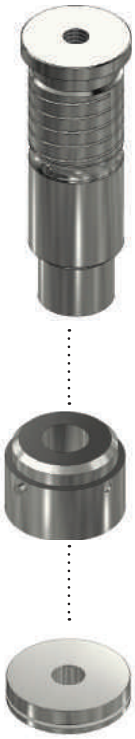

XMTE-4

MULTITOOLS FOR PRIMA POWER

MT 24-8

MT 10-16

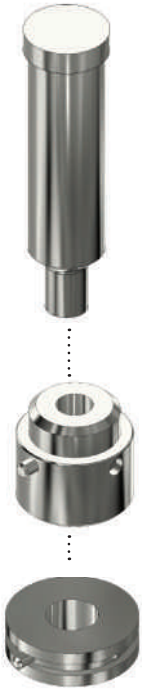

MT 8-24

ACCESSORIES

ADAPTERS

B-A

C-A

C-B

D-B

GRINDING FIXTURE

Tooling for Trumpf

SIZE 0

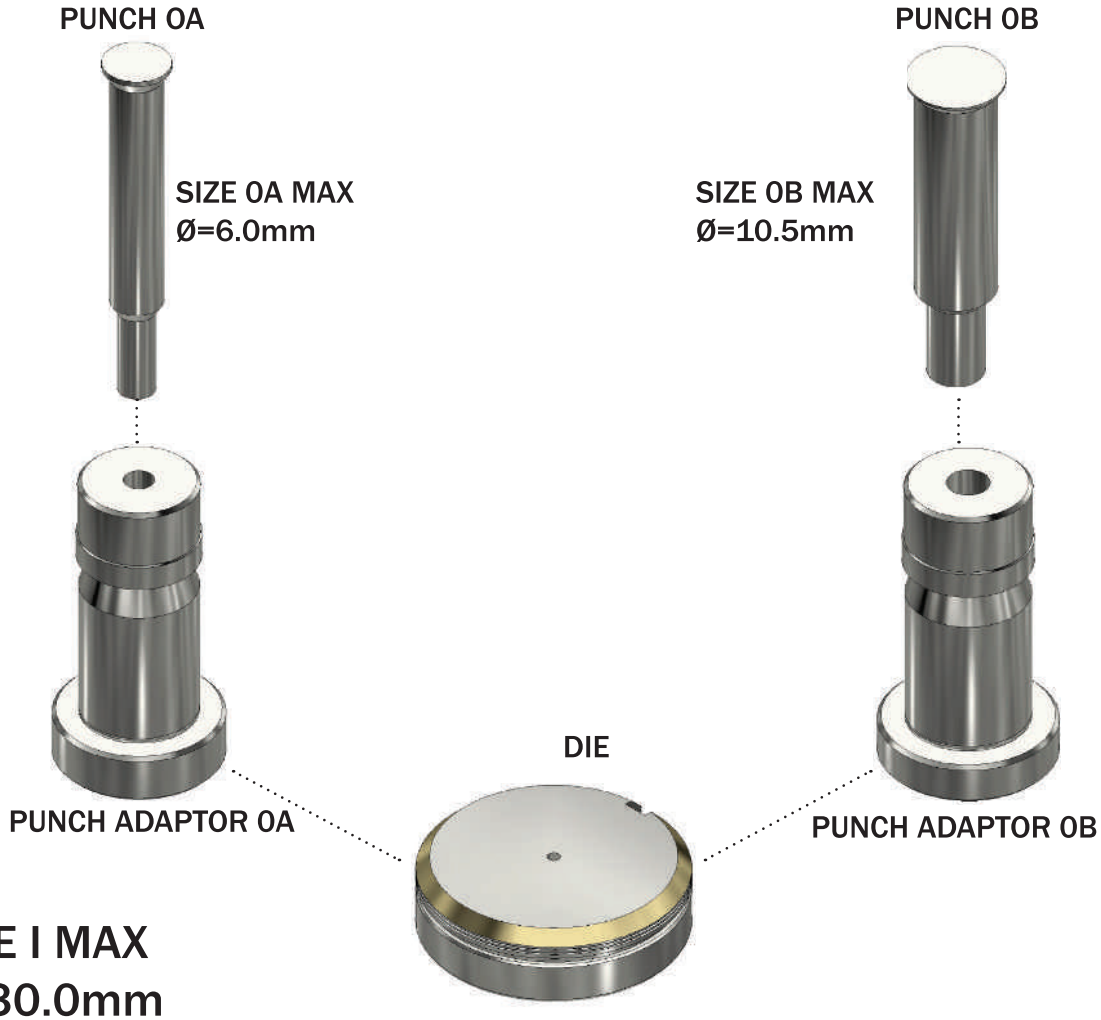

SIZE I MAX
Ø=30.0mm

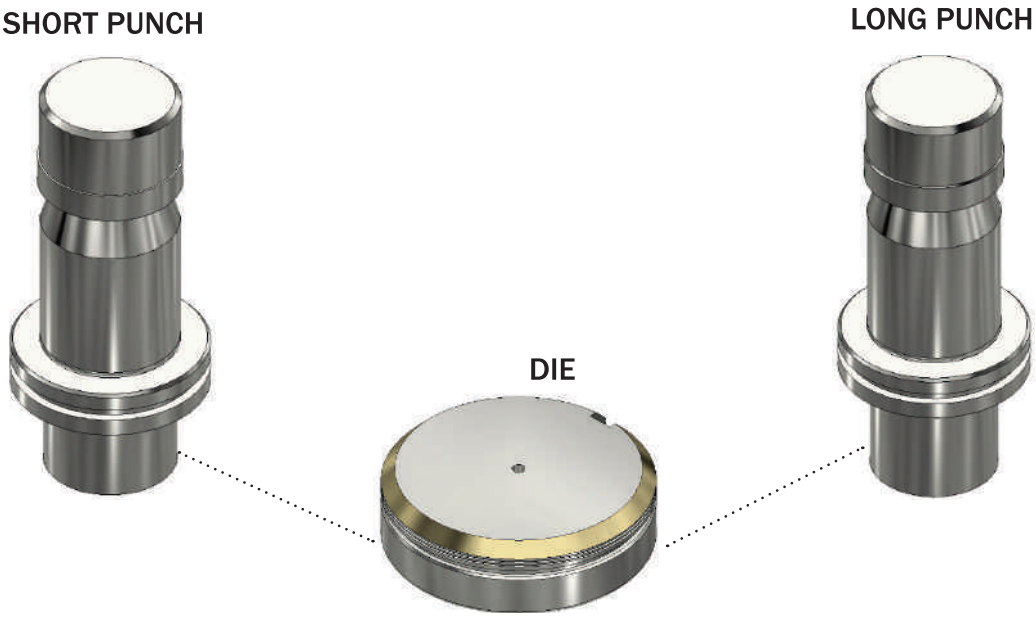

SIZE II MAX Ø= 76.2mm

PUNCH

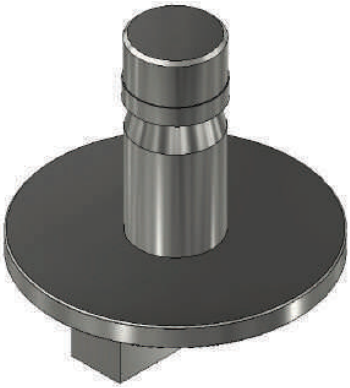

SIZE II-A = 30.01~40.0 mm
SIZE II-B = 40.01~50.8 mm
SIZE II-C = 50.81~60.0 mm
SIZE II-D = 60.01~76.2 mm

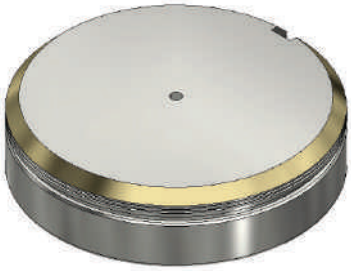

DIE

REPLACEABLE INSERT SYSTEM

SIZE I MAX Ø=30.0mm

SIZE II MAX Ø= 76.2mm

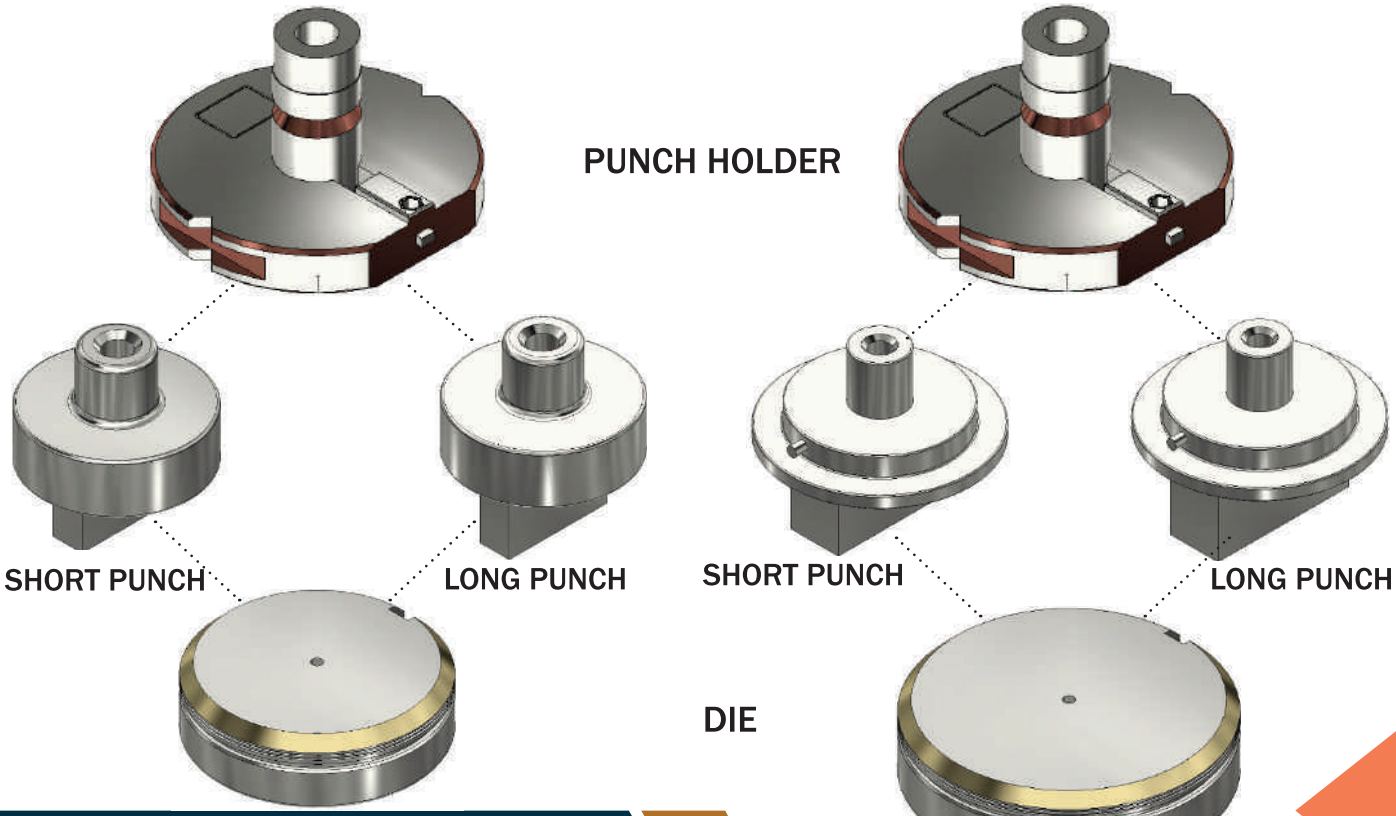

PARTING TOOLS

SIZE I MAX Ø=30.0mm

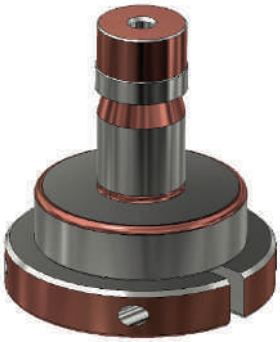

PARTING INSERT HOLDER

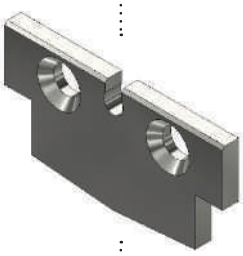

PARTING INSERT

DIE INSERT

DIE INSERT HOLDER

SIZE II MAX Ø= 76.2mm

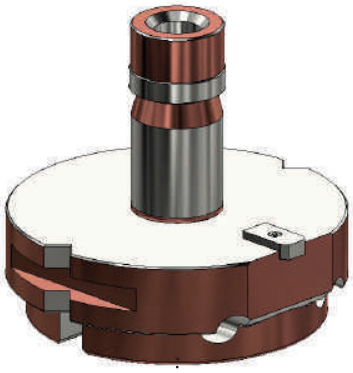

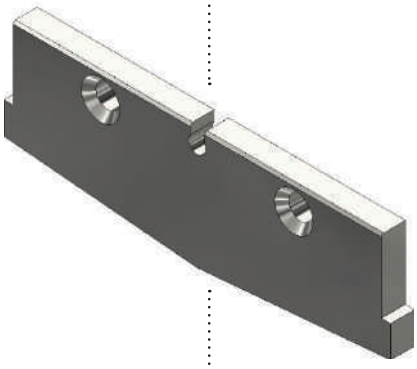

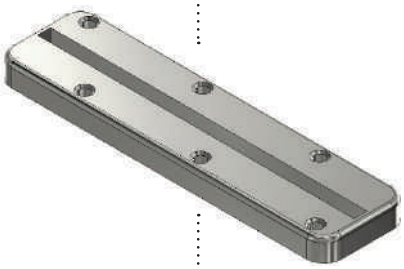

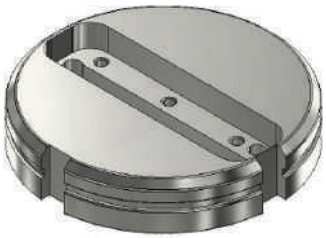

MT-10 MAX Ø=10.5 mm

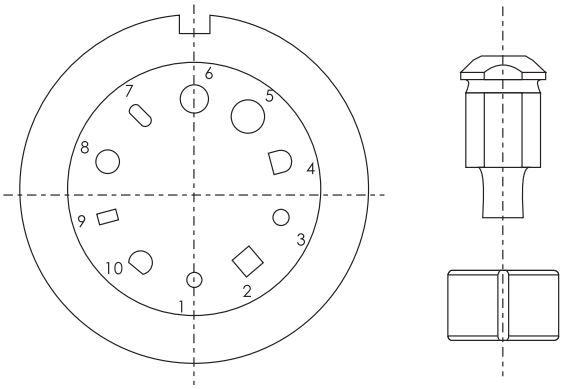

MT-5 MAX Ø=16 mm

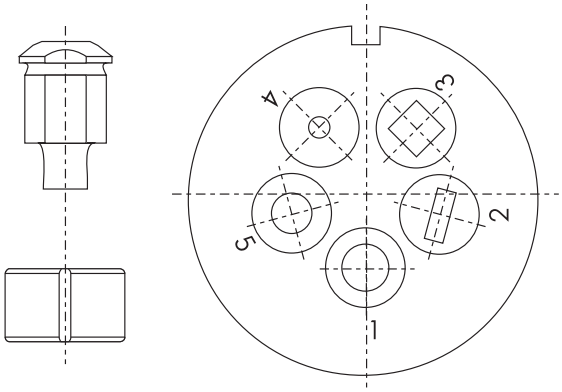

MT-4 MAX Ø=16 mm

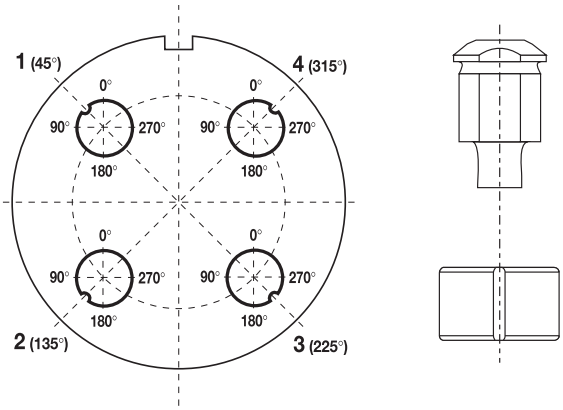

MT-6 MAX Ø=10.5 mm

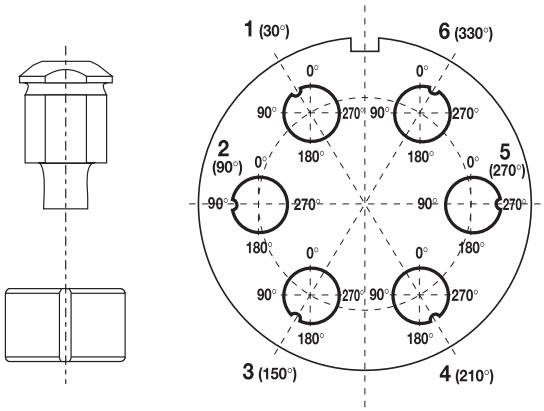

ACCESSORIES

CARTRIDGE

STRIPPER

ALIGNMENT RING SIZE I

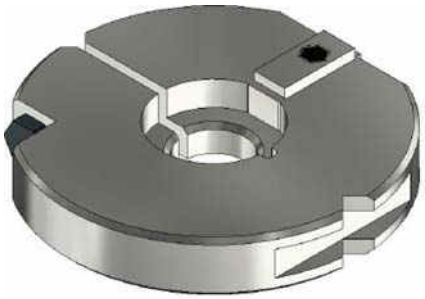

ALIGNMENT RING SIZE II

DIE SHIM

DIE ADAPTOR

Tooling for Muratec

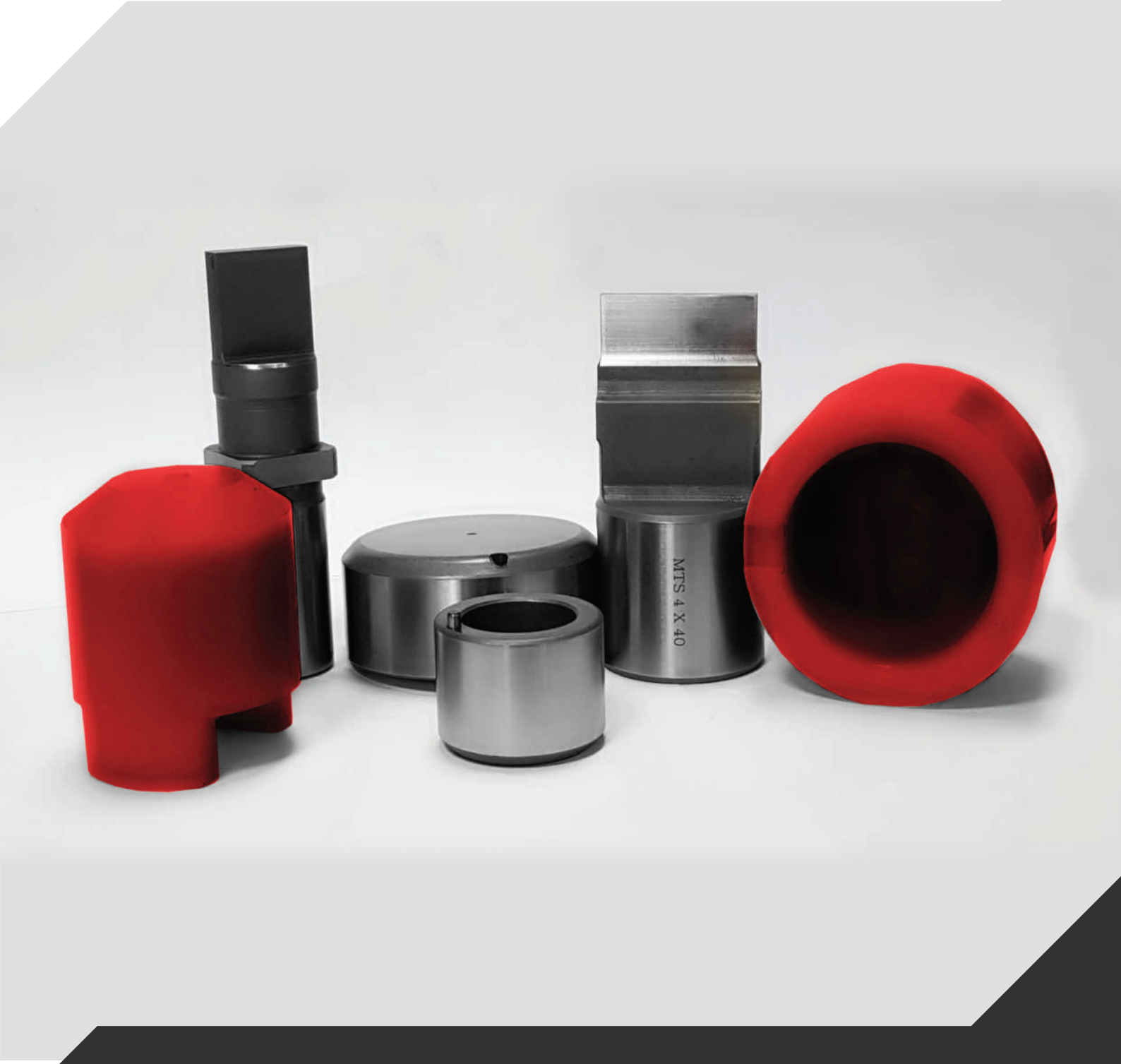

A stn max Ø 12.7mm

B stn max Ø25.4mm

C stn max Ø38.1mm

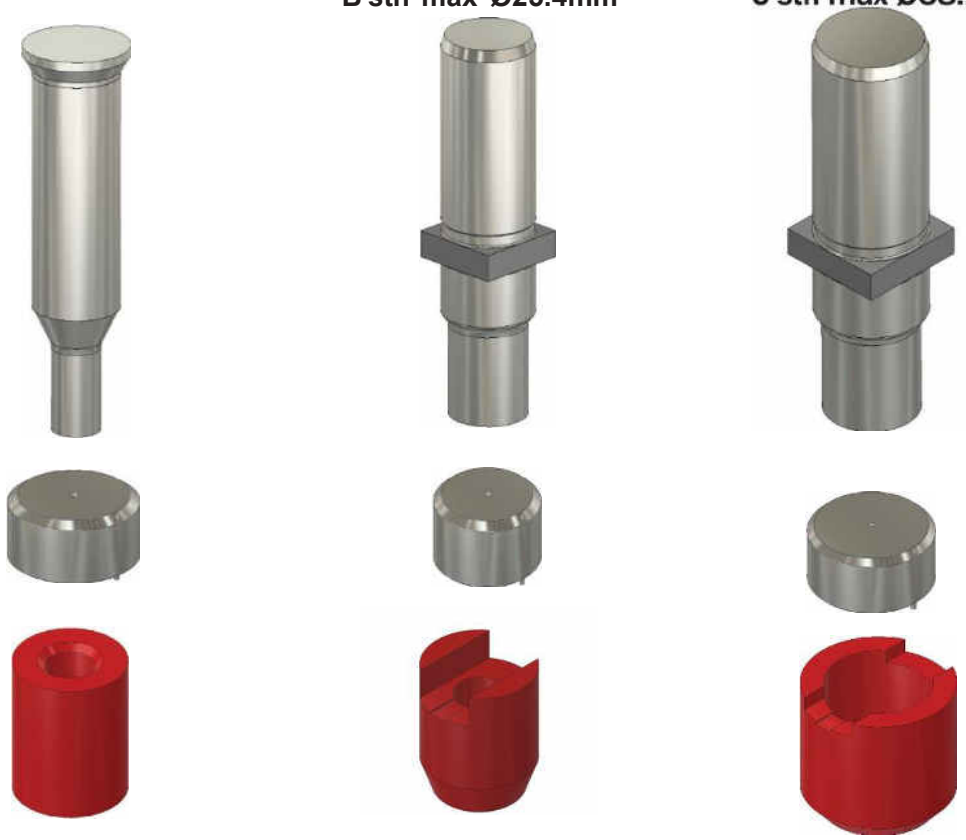

PUNCH

DIE

STRIPPER

D Station Max Ø 50.8mm

E station Max Ø 6 3 . 5 m m

F Stn max Ø 76.2mm

PUNCH

DIE

STRIPPER

G stn max Ø88.9mm

H stn max Ø104.8mm

J stn max Ø120.65mm

PUNCH

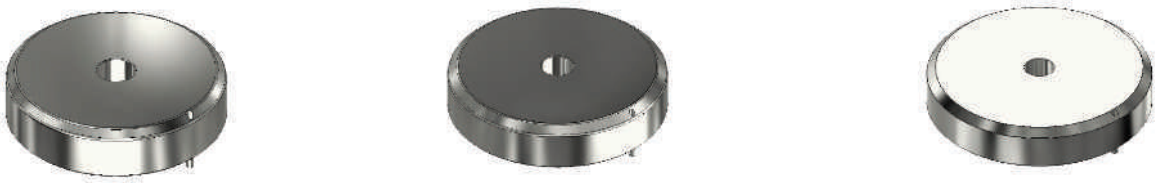

DIE

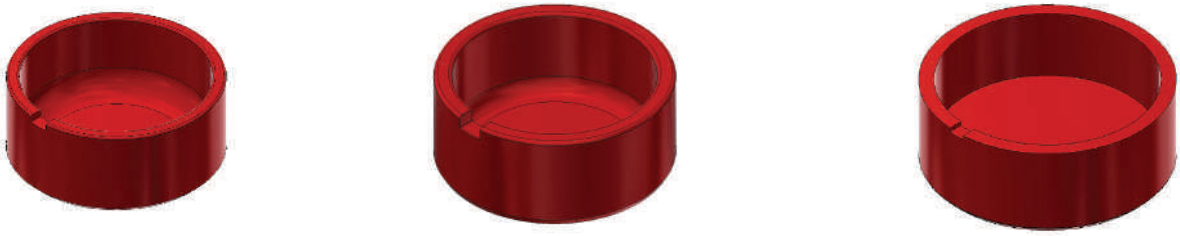

STRIPPER

K stn max Ø139.7mm

L stn max Ø152.4mm

DIE

OPTIONS

Coating:
In order to improve working characteristics, the surface of all punches can be coated; This treatment gives to the surface, a considerably greater hardness and self lubrication. MTS uses 3 types of coating as follows:

1. Type A (TiN): This type of coating (yellow gold colour) provides to the punch, a higher surface hardness and optimum self lubrication capability. Recommended for dough material difficult to be pulled such as copper and aluminum alloys.

2. Type B (TiCN): Adding carbon to TiN film, created a PVD coating that increases hardness nearly by 80%, resulting in extremely high wear resistance on cutting edges and wear surfaces. Recommended for stainless steel, nickel and copper application.

3. Type C (AlTiN): This type of coating (Black in colour) resists to higher temperature. The aluminum in the film converts to aluminum oxide as the coating heats up, resulting in greater protection against shear stress and increased wear resistance on cutting edges.

PROFILES

DWP

FOR BALANCED LOADINGS AND HIGH THICKNESSES

WN

FOR HIGH THICKNESS - VERY RIGID AND FAST PUNCHING MACHINES

Forming Tools

CLUSTER TOOL

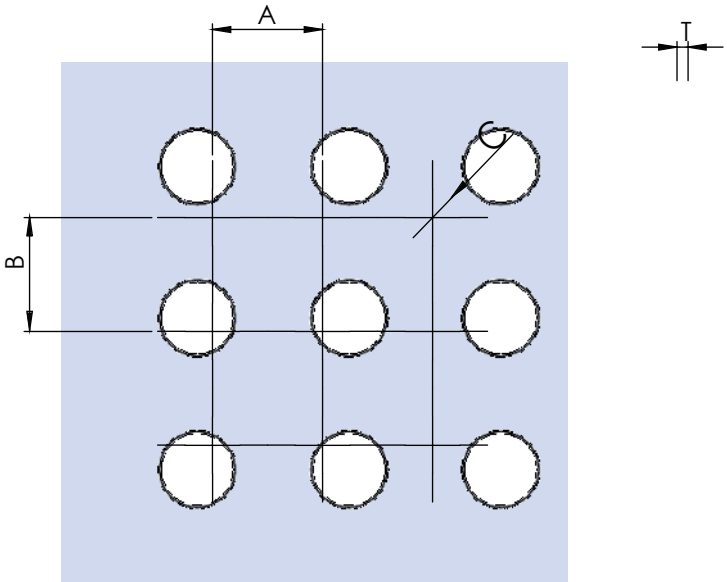

A: _____ C: _____

Machine: _____

Material: _____ B: _____ T: _____

CENTERPOINT TOOL

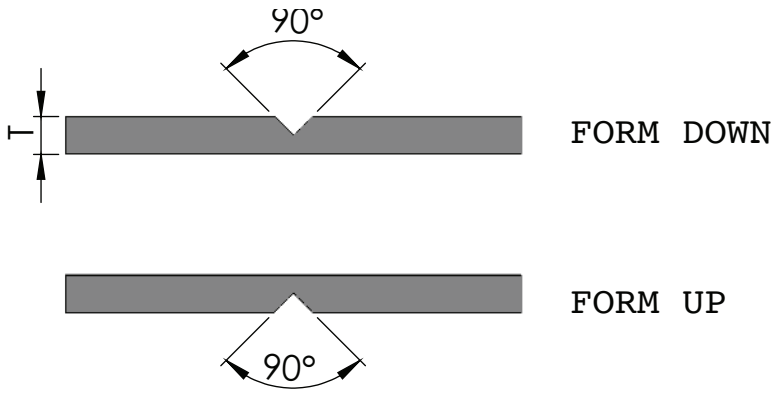

Machine: _____

Material: _____ T: _____

COUNTERSINK 1 TOOL

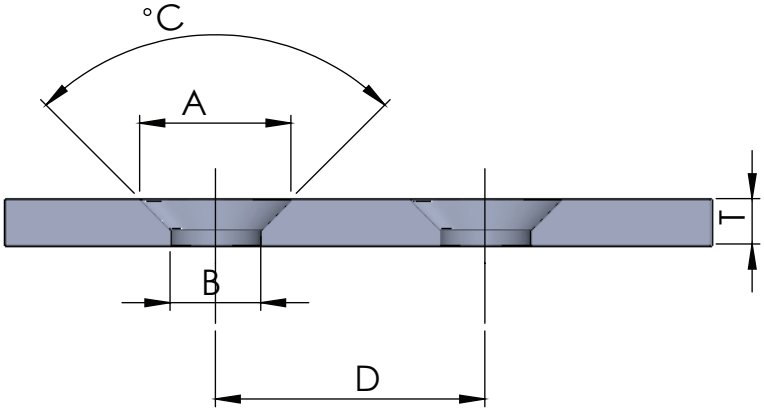

A: _____ C: _____

Machine: _____ B: _____ D: _____ T: _____

Material: _____

COUNTERSINK 2 TOOL

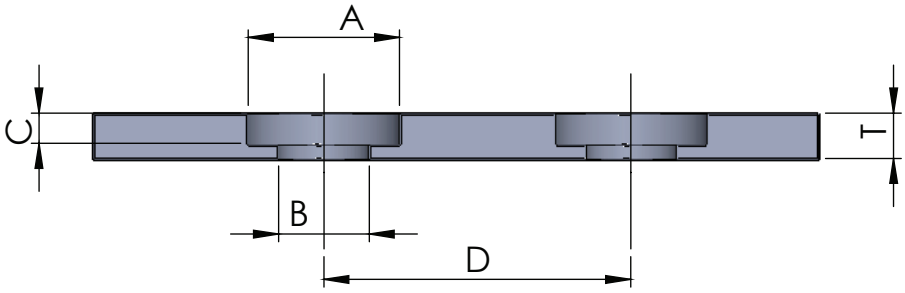

A: _____ C: _____

Machine: _____ B: _____ D: _____ T: _____

Material: _____

EMBOSS TOOL

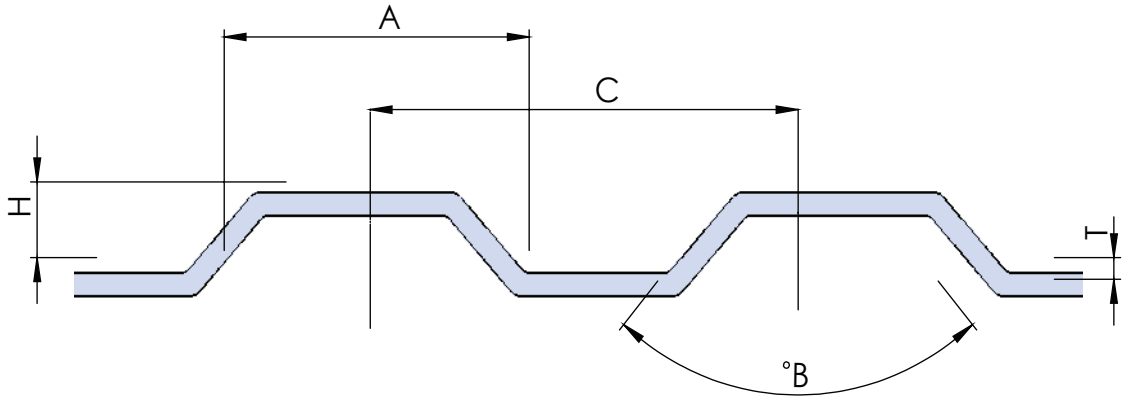

A: _____ C: _____

Machine: _____

B: _____ H: _____ T: _____

Material: _____

EMBOSS & EXTRUSION TOOL

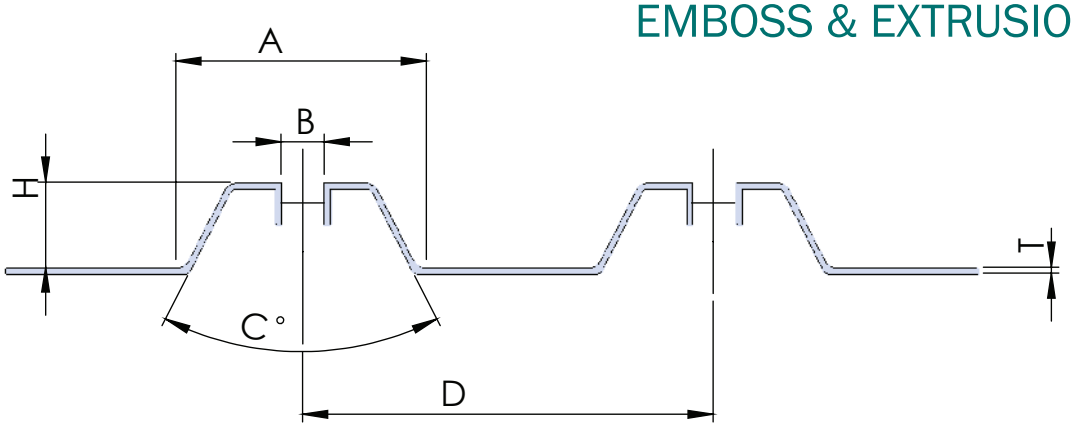

A: _____ C: _____ H: _____

Machine: _____

B: _____ D: _____ T: _____

Material: _____

EXTRUSION TOOL

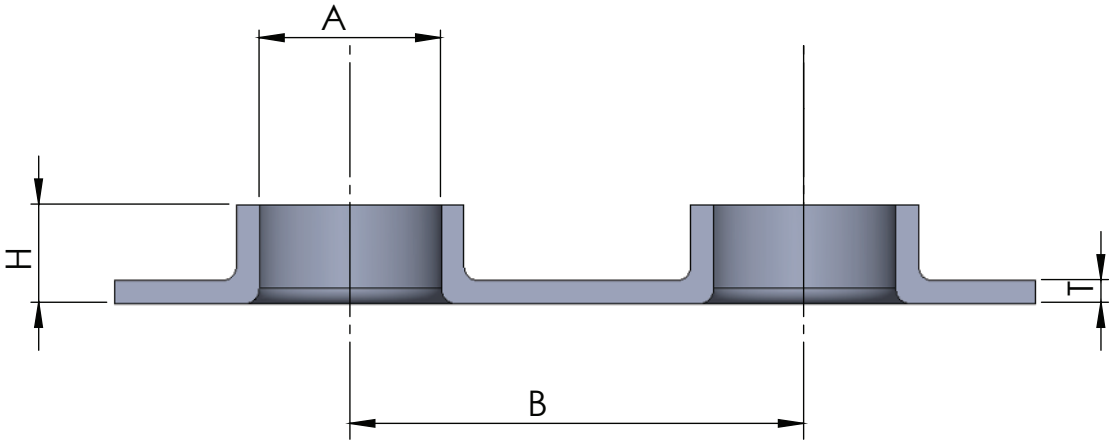

A: _____ H: _____

Machine: _____

B: _____ T: _____

Material: _____

PUNCHING & EXTRUSION TOOL

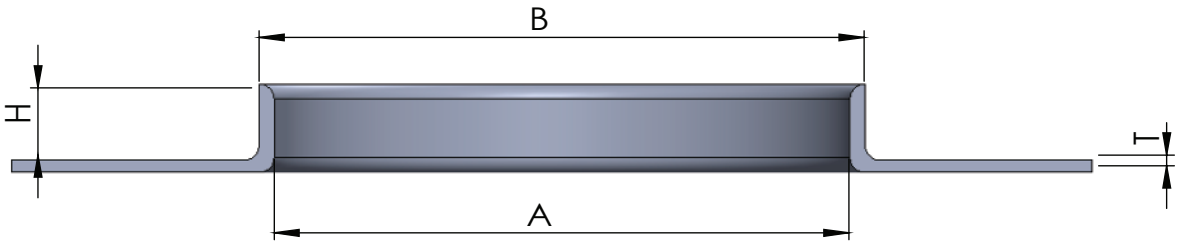

A: _____ H: _____

Machine: _____

B: _____ T: _____

Material: _____

LOUVER TOOL

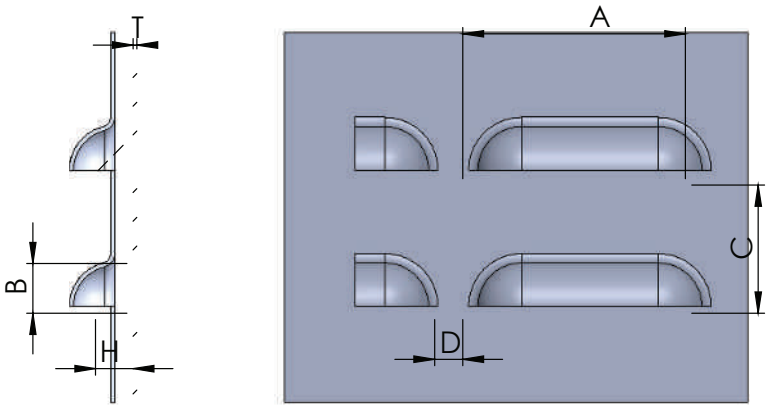

A: _____ D: _____

Machine: _____ B: _____ H: _____

Material: _____ C: _____ T: _____

LANCE & FORM TOOL

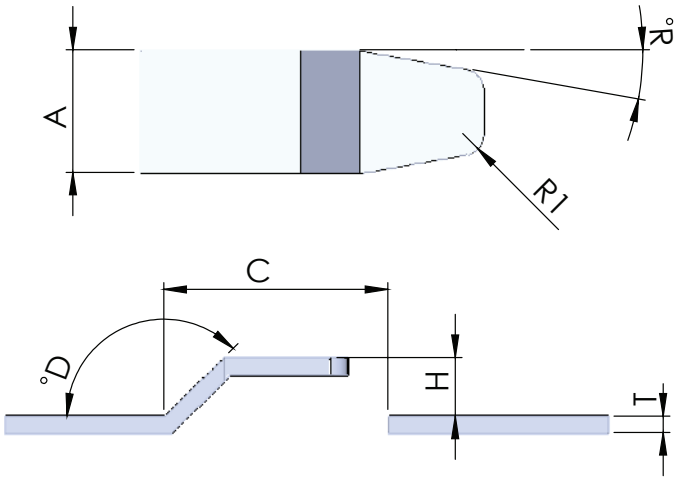

A: _____ D: _____ R: _____

Machine: _____ B: _____ H: _____ R1: _____

Material: _____ C: _____ T: _____

RIB TOOL

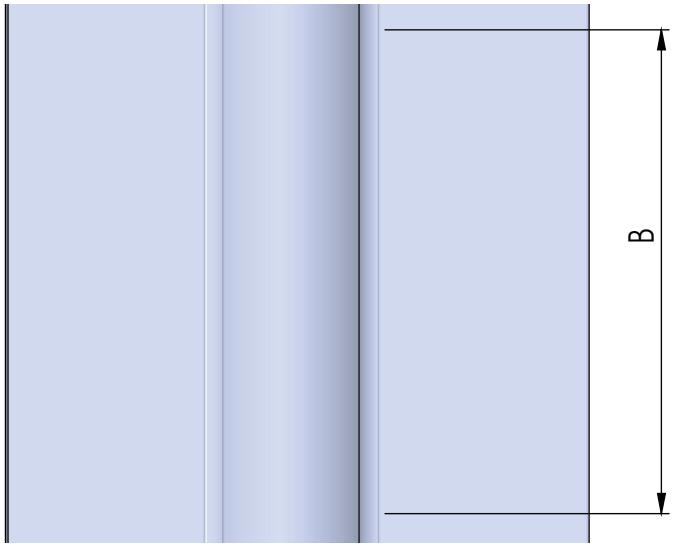

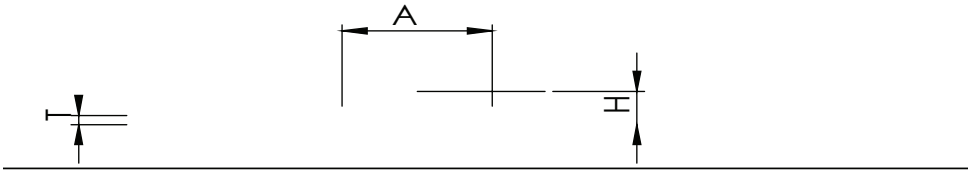

A: _____ H: _____

Machine: _____

B: _____ T: _____

Material: _____

HALF SHEAR TOOL

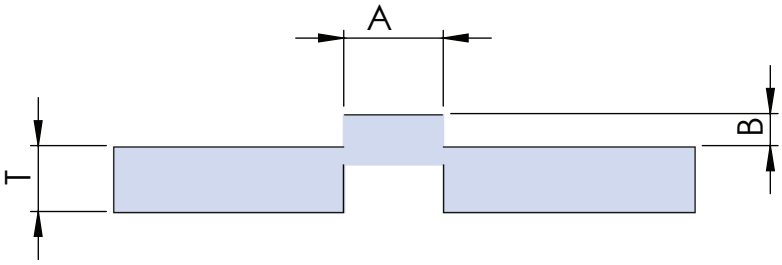

A: _____ T: _____

Machine: _____

Material: _____

B: _____

HANGLE TOOL

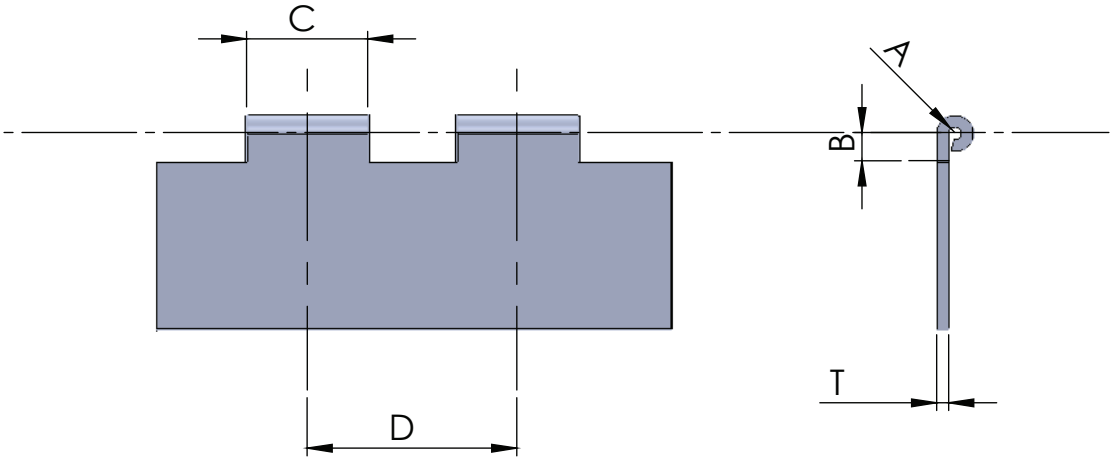

A: _____ C: _____

Machine: _____

B: _____ D: _____ T: _____

Material: _____

KNOCKOUT TOOL

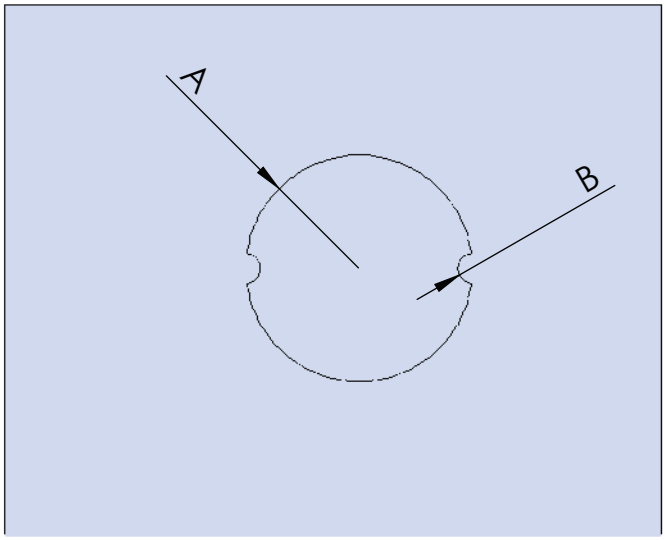

A: _____

Machine: _____

B: _____

Material: _____

STAMPING TOOL

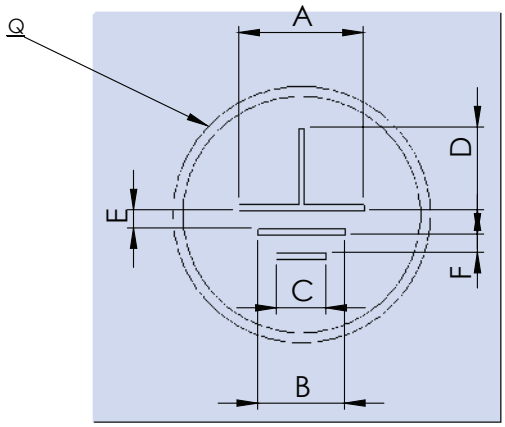

A: _____ D: _____ Q: _____

Machine: _____ B: _____ E: _____ H: _____

Material: _____ C: _____ F: _____ T: _____

LOGO TOOL

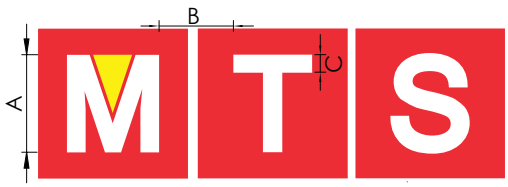

A: _____ C: _____

Machine: _____ B: _____

Material: _____

CALCULATIONS

MAX DIAGONALS THICK TURRET TOOLS

A StationB	StationC	StationD	Station	E StationF	Station
mm 12.7	mm 31.7	mm 50.8	mm 88.9	mm 114.3	mm 153.5

PUNCH GRINDING EFFECTS ON TONNAGE

Find here below an illustrative table concerning tonnage reduction, considering DWP shear with standard depth.

Material thickness in mm	11	,5	22	,5	3	456		
Tonnage reduction in %	60	50	40	35	25	20	15	10

TONNAGE GENERAL FORMULA

$$\frac{P \times S \times K}{28,3}$$

P = shape perimeter
S = material thickness
k= material coeficient

MaterialK	material
Aluminum	0.6
Copper	0.6
Brass0	.6
Mild steel	1
Stainless steel	1.5

Exemple:

$$\frac{\mathbf{40}\ \text{(square perimeter of mm 10 edge)} \times \mathbf{2}\ \text{(material thickness in mm)} \times \mathbf{1,5}\ \text{(K stainless steel)}}{\mathbf{28,3}} = \mathbf{4,24}\ \text{(tonnage)}$$

DIES TOLERANCE IN PERCENTAGE TO THICKNESS

Material	Thickness Range	Minimum or Blanking*	Standard	Maximum
Aluminum Copper Brass 20÷25% Kg/mm²	Up to mm 2	8%	10%	12%
	From mm 2 to mm 4	10%	12%	15%
	Over mm 4	12%	15%	20%
Mild steel 30÷40% Kg/mm²	Up to mm 2,5	15%	18%	20%
	From mm 2,5 to mm 5	18%	22%	25%
	Over mm 5	20%	25%	30%
Stainless steel 60÷80% Kg/mm²	Up to mm 1,5	15%	20%	22%
	From mm 1,5 to mm 3	18%	22%	25%
	Over mm 3	20%	25%	28%

* Blanking: when the scrap is the requested part.

SHAPES

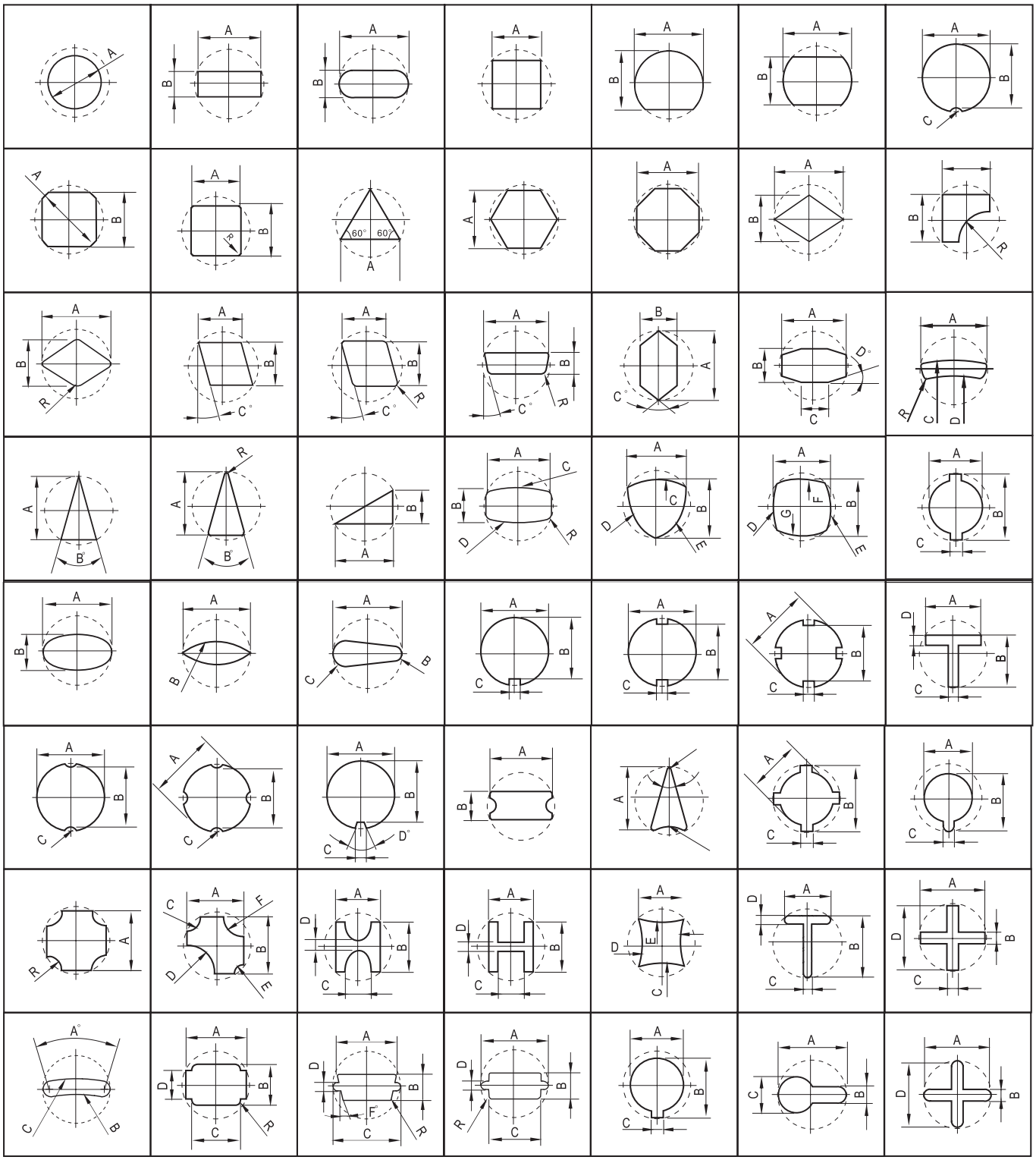

TOOLING FOR CNC
TURRET PUNCH PRESS

Amada
Trumpf
Muratec
Prima Power
LVD
Euromac
Boschert
Durma
Danobat
Salvagini

PRESS BRAKE TOOLS FOR
ALL MACHINES

MTS Tooling Pvt. Ltd.

Tel: 91 22 40661234 (16 lines)

website: www.mtstooling.com

email: info@mtstooling.com

Head Office: A/57, Giriraj Industrial Estate, Mahakali Caves Rd., Andheri (East), Mumbai - 400093, INDIA

Factory: Gat No. 1357, Pune Nagar Rd., Sanaswadi, Tal. Shirur, Dist. Pune - 412208, INDIA